FULLY ASSEMBLED SKID SPRAYER: FSW-P7-060F

SPRAYER BREAKDOWN

SPRAYER

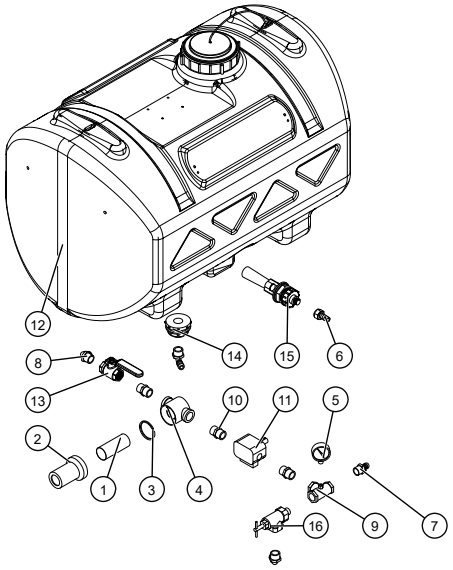

FRAME

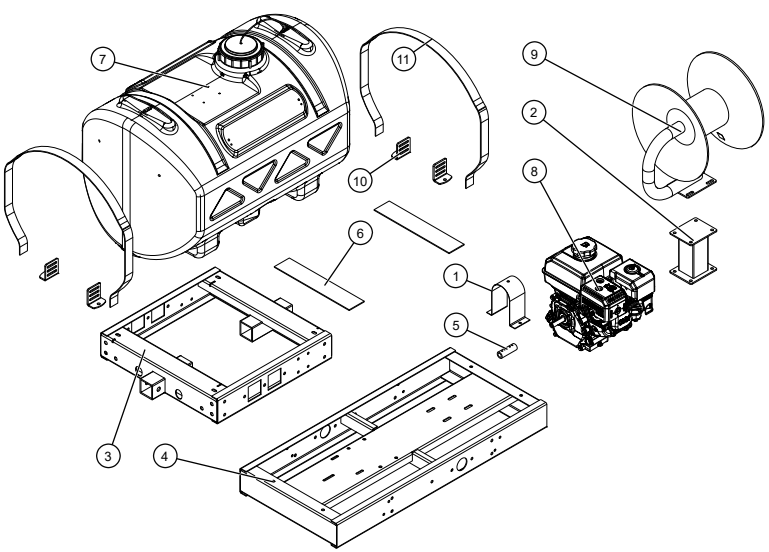

CLOSELY INSPECT ALL CONTENTS IN THE SHIPPING CARTON

- If you have damaged components: Contact the freight company that delivered the unit to file a claim.
- If you have missing components: Contact us at 800.825.5397.

ID	Part Number	Description	Qty
1	10684	Filter	1
2	11278	Poly Bowl	1
3	11302	EPDM Gasket	1
4	11317	Filter Body	1
5	2240GXB160	Gauge	1
6	3A12F	1/2" FPT x 1/2" HB Straight Fitting	1
7	3A3412	3/4" FPT x 1/2" HB Straight Fitting	1
8	3EL3412	3/4" MPT x 1/2" HB Elbow Fitting	3
9	3GTT3414	3/4" FPT x 3/4" FPT x 3/4" FPT Tee Fitting	1
10	3M34	3/4" MPT x 3/4" MPT Nipple Fitting	3
11	4900C	4 Roller Pump	1
12	33-103277	60 Gallon Tank with Sump	1
13	BBV-34	Brass Ball Valve 3/4"	1
14	BHF34	Bulk Head Fitting	1
15	G-8201002	Hydraulic Agitator	1
16	RV2066-06-58	400 PSI Nylon Valve	1

ID	Part Number	Description	Qty
1	31-100146	Pump Shield	1
2	32-100073	Hose Reel Riser	1
3	32-100107	Flex Frame	1
4	32-100049	Motor and Reel Frame	1
5	33-100201	Coupling 3/4" x 5/8"	1
6	33-103739	Anti-Slip Pad	2
7	33-103277	60 Gallon tank with Sump	1
8	ENG-R210-3/4	210cc 7HP Engine	1
9	HR-200	Hose Reel	1
10	TD-150	Tie Down Clamp	4
11	TDS1.5-67	Tie Down Strap	2